PROPOSED BUILDING: NAIL SPA

LOT AREA: .459 ACRE (19,994 S.F.)
BUILDING AREA : 2,000 S.F.
BUILDING HEIGHT: 14'-6 1/2" (SINGLE STORY)
ZONED: C3

LOT COVERAGE:

IMPERVIOUS = 13,548 S.F.
LOT TOTAL = 19,994 S.F.
68%

REQUIRED PARKING:

1 SPACE PER 200 S.F.
2000/200 = 10 SPACES REQUIRED

PARKING PROVIDED:

23 STRAIGHT IN PARKING SPACES
1 HC VAN ACCESSIBLE SPACE
24 TOTAL

SITE DATA & PARKING SUMMARY

NO SCALE (16)

SIZE	OFFICIAL NAME	#	SF VALUE	TOTAL
15-30 CALIPER	LIVE OAK	8	200 SF	1,600 SF
15-30 CALIPER	CREPE MYRTLE	3	100 SF	300 SF
2-5 GALLON	KNOCK-OUT ROSE	53	10 SF	530 SF
2-5 GALLON	INDIAN HAWTHORN	57	10 SF	570 SF

TOTAL VALUE: 3,000 SF

REQUIREMENTS:
1) 15% OF DEVELOPED AREA 0.459 ACRES (19,994 SF) = 2,999 SF
2) NOT LESS THAN 50% OF REQUIRED AREA SHALL BE TREES : 1,500 SF REQ. : 1,900 PROVIDED
3) NOT LESS THAN 50% OF TREES PLANTED SHALL BE CANOPY : 950 SF REQ. : 1,600 PROVIDED
4) ALL PARKING ISLANDS MUST HAVE A CANOPY TREE

TOTAL AREA REQUIRED: 2,999 SF
LANDSCAPED AREA PROVIDED: 3,280 SF

LANDSCAPE LEGEND

NO SCALE (15)

1. REMOVE ALL EXISTING TREES, CONSTRUCTION, OR OTHER OBSTRUCTIONS THAT WILL INTERFERE WITH CONSTRUCTION. VERIFY WITH OWNER OR ARCHITECT AT SITE.
2. PROTECT ALL EXISTING CONSTRUCTION TO REMAIN FROM DAMAGE DURING CONSTRUCTION (I.E. BUILDINGS, PAVING, WALKS, STREETS, FENCES, ETC.)
3. PROTECT FROM DAMAGE ALL EXISTING TREES THAT ARE TO REMAIN DURING CONSTRUCTION. MAINTAIN BARRIERS AROUND TREES AT A DISTANCE OF THE DRIPLINE PLUS 5'-0" BEYOND. EXISTING TREES USED FOR LANDSCAPE CREDIT MUST HAVE A MIN. TRUNK WIDTH OF 4 1/2" OR LARGER AND BE IN A HEALTHY PHYSICAL STATE. SHOULD EXISTING TREES USED FOR LANDSCAPE CREDIT DIE, THEY SHALL BE REPLACED WITH NEW TREES ACCORDING TO THE REQUIREMENTS OF SECTION 62.429(A)(2)C. IF EXISTING TREES ARE INTENDED TO BE PRESERVED AND UTILIZED TOWARDS REQUIRED LANDSCAPING, A TRE SURVEY WILL BE REQUIRED.
4. REFER TO SITE PLAN FOR APPROXIMATE LOCATION OF ALL KNOWN UTILITIES. VERIFY LOCATIONS OF ALL WATER, POWER, SANITARY SEWER, STORM SEWER, GAS, ETC. PROTECT AND MARK APPROPRIATELY PRIOR TO BEGINNING ANY EXCAVATION, NEW CONSTRUCTION OR OTHER WORK AT THE SITE.
5. GENERAL CONTRACTOR SHALL BE RESPONSIBLE FOR VERIFYING ALL DIMENSIONS DURING LAYOUT AT THE SITE AND SHALL CONTACT THE ARCHITECT SHOULD ANY PROBLEM BECOME EVIDENT.
6. AREAS TO BE SEEDED INCLUDE ALL AREAS WHERE GRADING IS REQUIRED OR WHERE GRASS IS DISTURBED. DISTURBED AREAS SHALL BE RESTORED TO ORIGINAL CONDITION. (PULVERIZE TOP SOIL, FINE GRADE AND RAKE FOR PLANTING).
7. THE CONTRACTOR SHALL NOTIFY THE CITY ENGINEERING DIVISION FORTY-EIGHT (48) HOURS IN ADVANCE OF ANY CONSTRUCTION IN CITY RIGHT-OF-WAY AND/OR PUBLIC UTILITY EASEMENT.
8. DURING CONSTRUCTION, THE GENERAL CONTRACTOR SHALL MAKE PROVISIONS FOR THE POTENTIAL EROSION OF SOIL FROM THE SITE THROUGH THE USE OF HAY BALES OR SILT FENCES STRATEGICALLY PLACED AROUND THE PROPERTY AND AT EXISTING STORM DRAIN INLETS ADJACENT TO NEW CONSTRUCTION. THE GENERAL CONTRACTOR SHALL OBTAIN FINAL APPROVAL OF THE ACTUAL METHOD REQUIRED AND ITS PLACEMENT FROM THE CITY ENGINEERING DIVISION PRIOR TO BEGINNING ANY SITEWORK.
9. ACCESSIBLE ROUTES SHALL NOT EXCEED 5% SLOPE (1:20) IN THE DIRECTION OF TRAVEL. CROSS-SLOPE NOT TO EXCEED 2% (1:50).
10. ALL PAVING DIMENSIONS ARE TO BACK OF CURB.
11. 4" DIA. CERAMIC LANE MARKERS AS SPECIFIED - @ 5'-0" O.C.
12. ALL SIGNAGE WILL BE PERMITTED SEPARATELY.
13. TO ENSURE THE GROWTH OF TREES IN END ISLANDS, A MINIMUM 24-INCH SOIL DEPTH AND 250 CUBIC FEET OF APPROPRIATE PLANTING MEDIUM IS REQUIRED PER TREE, WITH TOPSOIL MOUNDED TO A CENTER HEIGHT.
14. EXISTING BUILDING WILL BE REMOVED PRIOR TO FINAL CERTIFICATE OF OCCUPANCY.
15. WHEN SITE REDEVELOPMENT OCCURS, SITE WILL BE GRADED SO THAT NO DRAINAGE WILL NEGATIVELY IMPACT NEIGHBORING PROPERTY.
16. WHERE ELECTRIC FACILITIES ARE SINTALLED, BTU HAS THE RIGHT TO INSTALL, OPERATE, RELOCATE, CONSTRUCT, RECONSTRUCT, ADD TO, MAINTAIN, INSPECT, PATROL, ENLARGE, REPAIR, REMOVE, AND REPLACE SAID FACILITIES UPON, OVER, UNDER, AND ACROSS THE PROPERTY INCLUDED IN THE PUE, AND THE RIGHT OF INGRESS AND EGRESS ON PROPERTY ADJACENT TO THE PUE TO ACCESS ELECTRIC FACILITIES.
17. SILT FENCE WILL BE CONSTRUCTED ALONG PROPERTY LINE NEAREST TO MALONEY AVE AS WELL AS FIRE LANE FOR EROSION CONTROL.
18. SINGLE SWING PIPE GATE TO BE IN PLACE AT MALONEY AVE. ENTRANCE. GATE TO BE LOCKED DURING NON-BUSINESS HOURS.
19. EXISTING SIGN IS ~16'-0" HIGH AND ~36 SQ. FT. (12'-0" X 3'-0").
20. NEW UTILITY CONNECTIONS TO EXISTING LINES. EXACT LOCATION FOR EACH TO BE VERIFIED IN FIELD.

GENERAL NOTES

NO SCALE (8)

VICINITY MAP

NO SCALE (4)

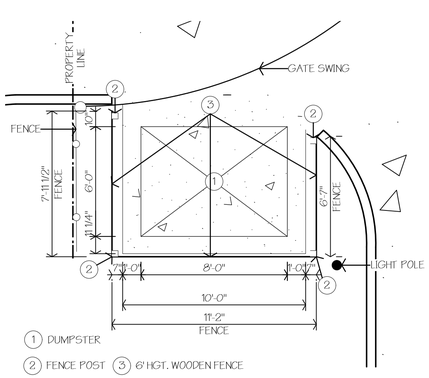

DUMPSTER ENCLOSURE

1/4"=1'-0" (17)

EXISTING FENC TO BE REMOVED
NEW PRIVACY FENCE
PROPERTY LINE
SETBACK LINE
FIRE LANE MARKING, REF. 19/A1.2
LAY-OF HOSE LINE
GAS LINE
OVERHEAD UTILITIES
6" SANITARY SEWER
EXISTING TO BE REMOVED
12" WATER DISTRIBUTION LINE
PROPOSED ASPHALT PAVING, REF. 16/A1.5
PROPOSED CONCRETE SIDEWALK, REF. 1/A1.5
PROPOSED PARKING STALL COUNT
KEYED NOTE, REF. 16/A1.1
EXISTING FIRE HYDRANT
EXISTING UTILITY POLE TO BE REMOVED
EXISTING UTILITY POLE
STORM SEWER MANHOLE
SANITARY SEWER MANHOLE
EXISTING SIGNAGE TO REMAIN
EXISTING PARKING LIGHT POLE TO BE REMOVED
PROPOSED PARKING LIGHT POLE
EXISTING STEET SIGN
I.R. IRON ROD

GRAPHIC LEGEND

NO SCALE (13)

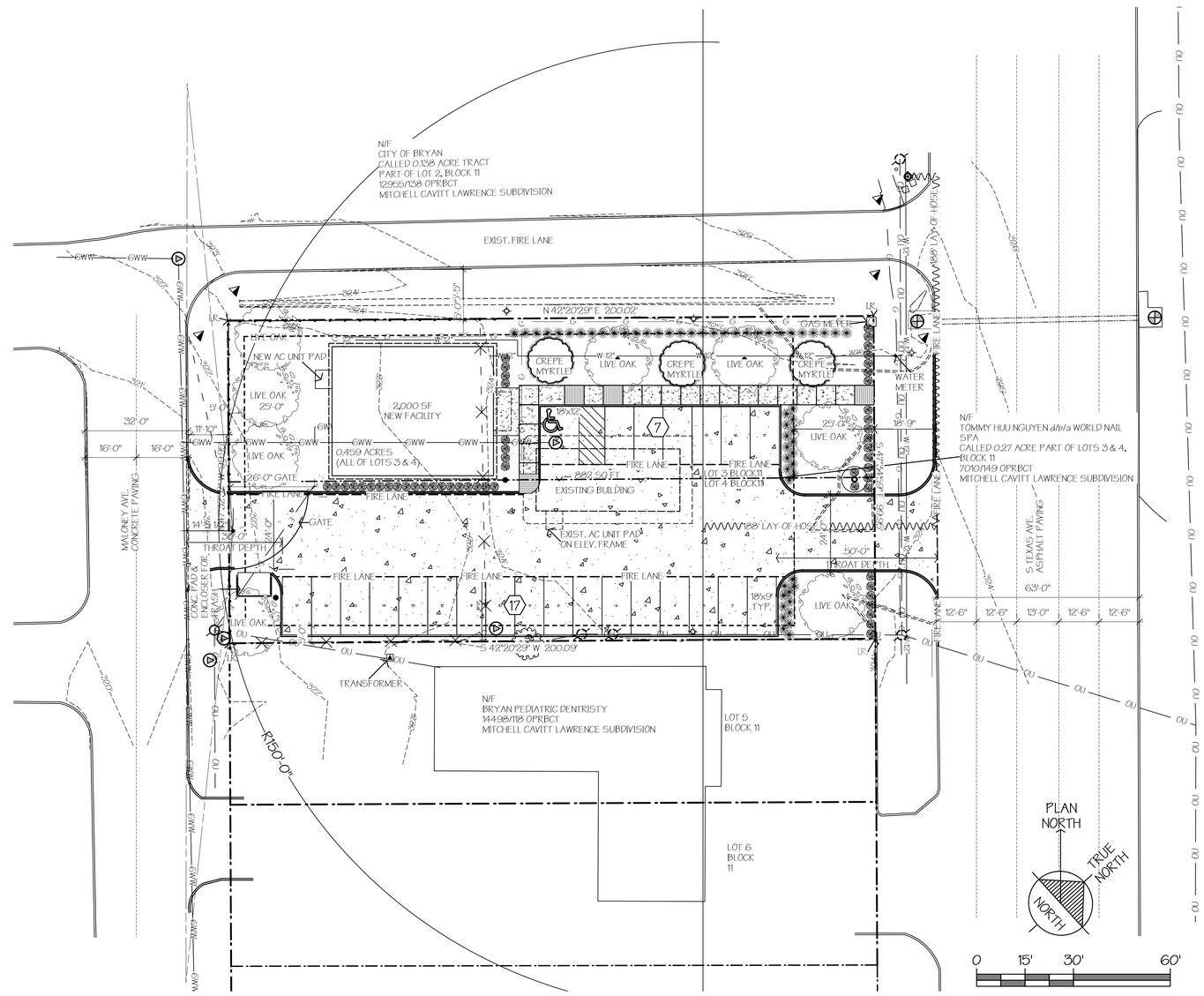

SITE PLAN

1" = 20'-0" (1)

PATTERSON ARCHITECTS
making a difference by Design
www.pattersonarchitects.net
701 South Texas Avenue
Bryan, Texas 77803
979.775.6036
design@patarch.com

FRED A. PATTERSON
REGISTRATION NUMBER: 10389

THESE DOCUMENTS ARE FOR INTERIM REVIEW AND ARE NOT INTENDED FOR REGULATORY APPROVAL, BIDDING, PERMIT, OR CONSTRUCTION PURPOSES.

THE NEW
WORLD NAIL SPA
2500 SOUTH TEXAS AVENUE
BRYAN, TEXAS

No:	Date:	Issue Notes:

Drawn By:	KS
Checked By:	BP
Patterson Project No.:	2122
Building Inventory No.:	
Plot Date:	Jan 17, 2022
CAD File:	A1.1 Site Plan 2022.vwx
Project No.:	2021-2122

Sheet Title:
SITE PLAN

Sheet
A1.0
1 of 1